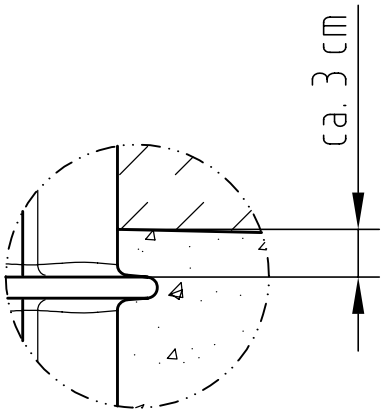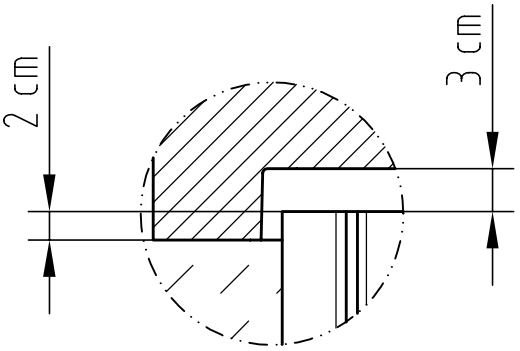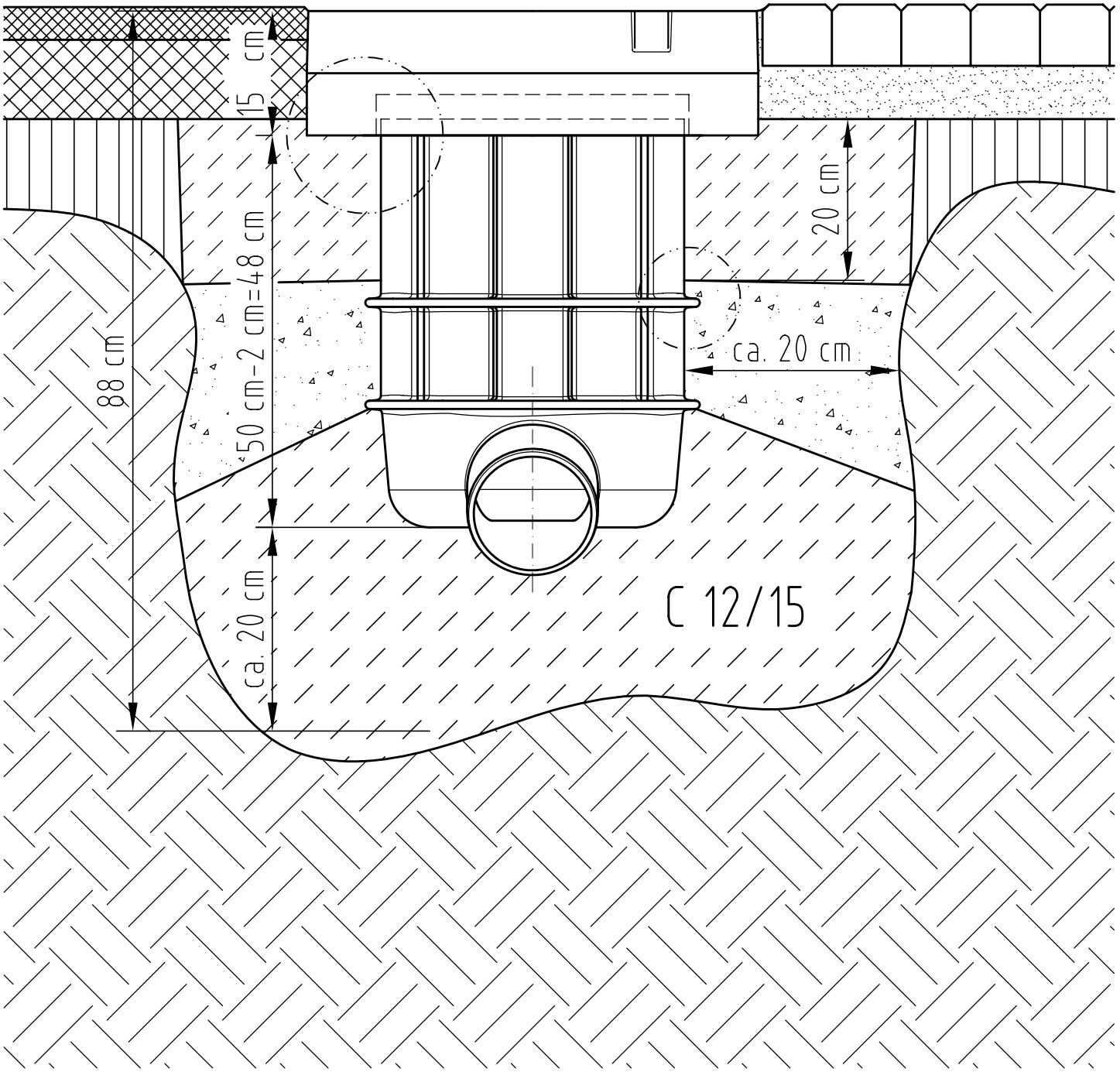# Combipoint – laag model